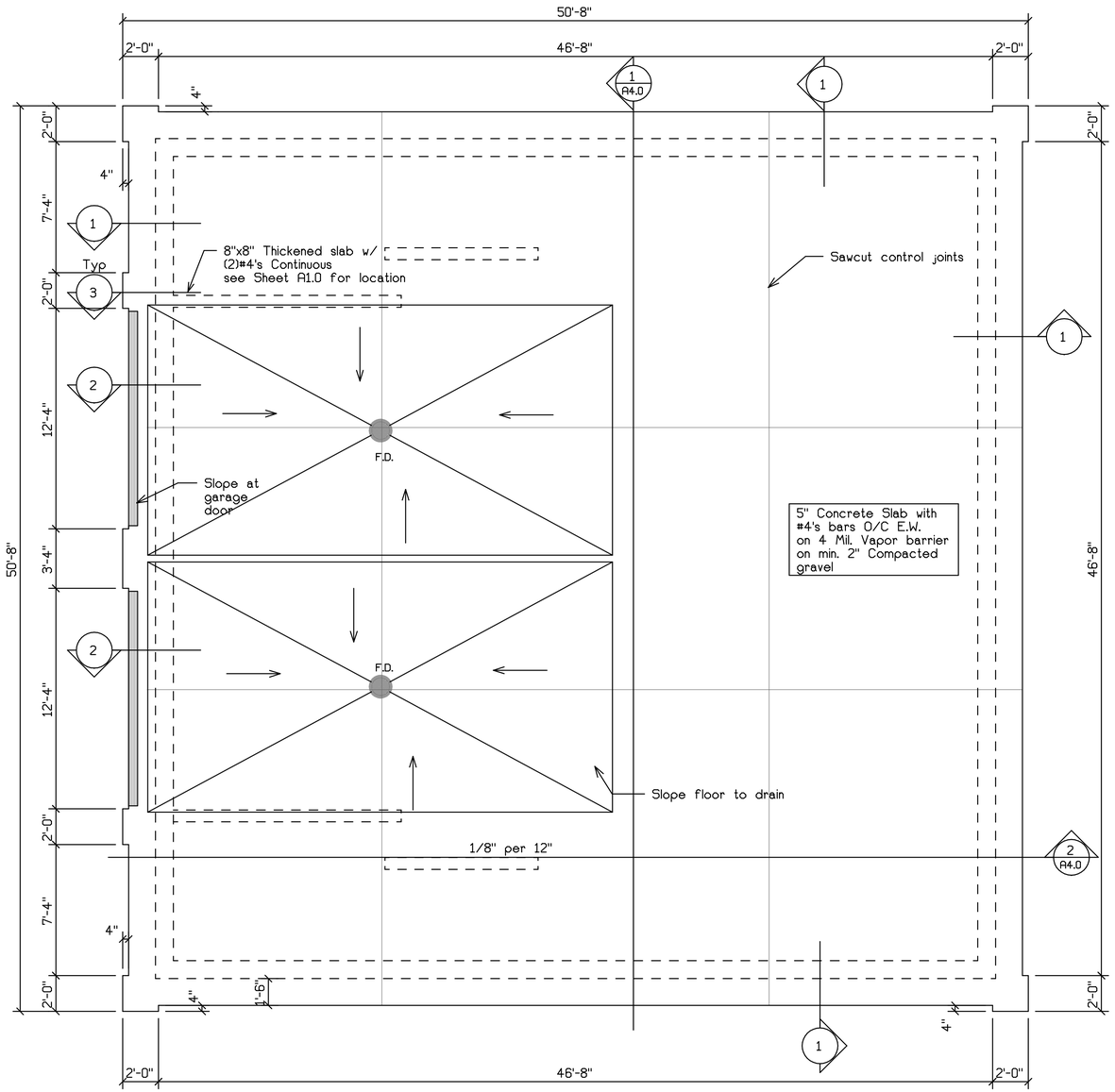

Foundation Plan

Scale = 1/4"=1'-0"

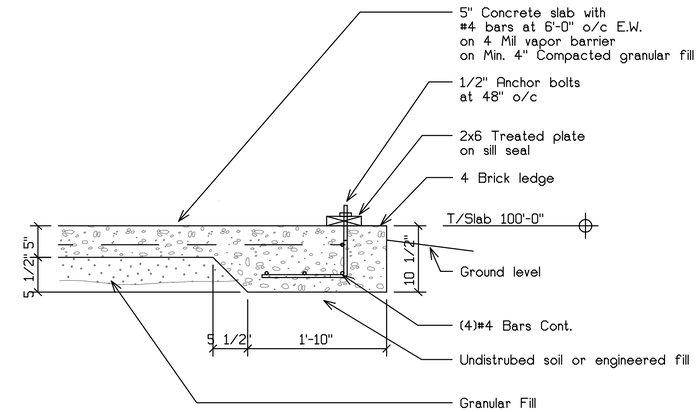

Section at Brick Ledge

Scale = 1"=1'-0"

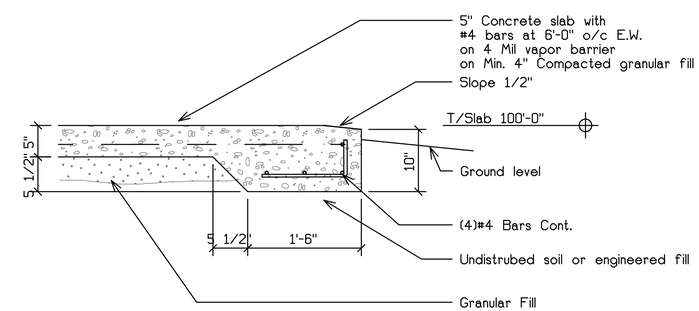

Floating Slab at Garage Door Section

Scale = 1"=1'-0"

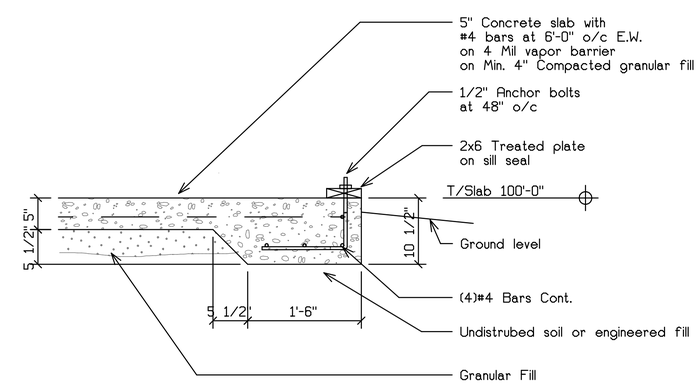

Floating Slab Wall Section

Scale = 1"=1'-0"

Jeffery Groenier, Architect
830 S. Main Street
Oregon, WI 53575
608-835-3196

This document contains confidential or proprietary information of Concepts in Architecture, LLC. Neither this document nor the information herein is to be reproduced, distributed, used, or disclosed without authorization.

Concepts In Architecture, LLC

Proposed for: StorageShopUSA
Greg Thompson - Owner

Address: 4610 Milwaukee Street
Madison, WI 53714
Phone 608.444.1515 Fax 866.381.5777

Project: Storage Unit

Address: De Pere, Wisconsin

Sheet Title: Foundation Plan "A"

Date:	12-20-2006
Scale:	As Noted
Job #:	06-01

SHEET

S1.0